MULTIFEED TUBULAR 2030 SOAP DISPENSER

TOUCH-FREE ELECTRONIC SOAP DISPENSER FOR MULTIFEED SYSTEM

SPECIFICATIONS

Touch-free electronic soap dispenser for wall-mounted installation. Activated by infrared sensor. For use with any non-proprietary soap. Connects to central Multifeed soap system (which can support up to six soap dispensers simultaneously). Chrome plated body, other finishes available. With a designated peristaltic pump that prevents clogging and back flow. Adjustable settings by remote control: soap quantity, soap tank refill, temporary off and reset to factory settings.

OPERATION

Touch-free electronic soap dispenser operated by infrared sensor. The soap dispenser automatically activates when users place their hands within sensor range, providing a measured amount of soap (adjustable by remote control). If the users remove the hand before the full amount is dispensed, the soap dispenser immediately stops the soap flow.

APPLICATION

With the dripless automatic shutoff, this soap dispenser helps washroom organization and cleanliness. Using the Multifeed system, it is easily and quickly refilled and maintained. Combined with the touch-free electronic faucet, it creates a germ-free automated environment. Ideal for stadiums, train stations, other transportation hubs and highway rest stops.

PRODUCT AT A GLANCE

Installation	Wall-mounted
Power Supply	12V transformer
Soap	For Multifeed soap system. Peristaltic pump enables the use of any kind of liquid soap, detergent or antibacterial gel
Soap Dose	Default setting: 1.2-1.6 cc Adjustable by remote control in accordance to the selected soap.
Refill	Soap priming operated by remote control or by easy-to-use manual refill button

ORDERING INFORMATION

MODEL	CODE	POWER	ADDITIONAL SPECIFICATIONS
TUBULAR 2030 SD MF	07292081	12V Transformer	For concrete and brick walls installation Designed for the Multifeed soap system

OPTIONS

OPTION	CODE
Remote control	07100008
Top filling Multifeed kit with soap level indicator	07220152
Top filling Multifeed kit	07220090
Under the deck filling Multifeed kit	07220096
Matching touch free water faucet	Upon request

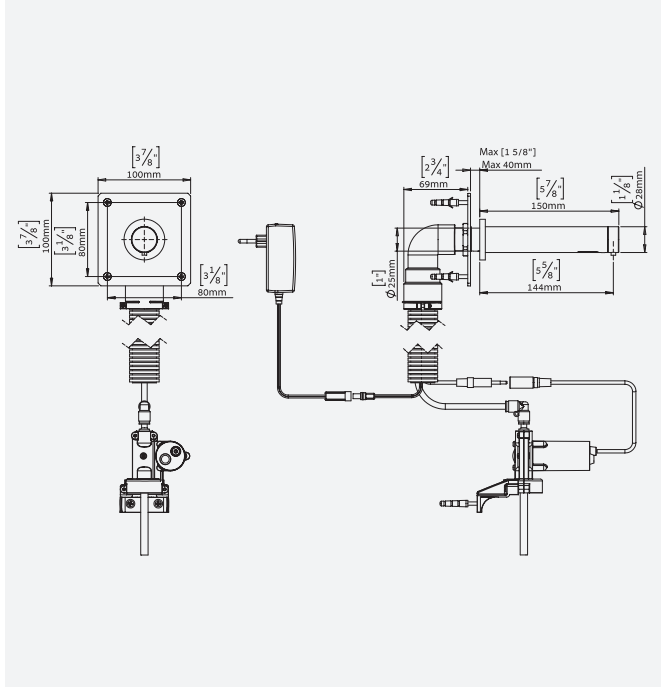

STERN ENGINEERING LTD.

ADVANTAGES

- LEED RATING
- SOAP AND WATER
- GERM FREE
- CHANGE SETTINGS
- EASY TO INSTALL
- CLOGGING FREE
- MULTIFEED
- ADA DESIGNED

777 Passaic Avenue
Clifton NJ, 07012
USA: sternusa@sternfaucets.com
International: info@sternfaucets.com
Toll Free: 1-800-4364410

www.sternfaucets.com